Synchronous Online: Start 12pm, Wednesday 9th December

MAS2905: Probability and Bayesian Methods with R

Newcastle University
lee.fawcett@ncl.ac.uk

Semester 1, 2020/21

The story so far...

- You should now be working through the mini project: deadline **4pm, Thursday 17th December**
- We now only have Chapters 6 and 7 to complete – in today's lecture, we will focus on completing Chapter 6
- You should have already made a start on Chapter 6 by watching the video for **Home Study 8** earlier this week

We will now continue with a recap and some examples

The story so far...

- You should now be working through the mini project: deadline **4pm, Thursday 17th December**
- We now only have Chapters 6 and 7 to complete – in today's lecture, we will focus on completing Chapter 6
- You should have already made a start on Chapter 6 by watching the video for **Home Study 8** earlier this week

We will now continue with a recap and some examples

The story so far...

- You should now be working through the mini project: deadline **4pm, Thursday 17th December**
- We now only have Chapters 6 and 7 to complete – in today's lecture, we will focus on completing Chapter 6
- You should have already made a start on Chapter 6 by watching the video for **Home Study 8** earlier this week

We will now continue with a recap and some examples

The story so far...

- You should now be working through the mini project: deadline **4pm, Thursday 17th December**
- We now only have Chapters 6 and 7 to complete – in today's lecture, we will focus on completing Chapter 6
- You should have already made a start on Chapter 6 by watching the video for **Home Study 8** earlier this week

  We will now continue with a recap and some examples

6. Bivariate distributions

In Chapter 6 we do two main things:

1. Consider how to simulate from bivariate distributions using our knowledge of the **marginal** and **conditional distributions**
2. Consider simulation from the **Bivariate Normal Distribution**
   - Using the method in (1)
   - Using the `MASS` package in R (this is useful for simulating from higher-dimensional Normal distributions)

6. Bivariate distributions

In Chapter 6 we do two main things:

1. Consider how to simulate from bivariate distributions using our knowledge of the **marginal** and **conditional distributions**
2. Consider simulation from the **Bivariate Normal Distribution**
   - Using the method in (1)
   - Using the `MASS` package in R (this is useful for simulating from higher-dimensional Normal distributions)

6. Bivariate distributions

In Chapter 6 we do two main things:

1. Consider how to simulate from bivariate distributions using our knowledge of the **marginal** and **conditional distributions**
2. Consider simulation from the **Bivariate Normal Distribution**
   - Using the method in (1)
   - Using the `MASS` package in R (this is useful for simulating from higher-dimensional Normal distributions)

6. Bivariate distributions

In Chapter 6 we do two main things:

1. Consider how to simulate from bivariate distributions using our knowledge of the **marginal** and **conditional distributions**
2. Consider simulation from the **Bivariate Normal Distribution**
   - Using the method in (1)
   - Using the `MASS` package in R (this is useful for simulating from higher-dimensional Normal distributions)

Illustration: Bonus Example

Example

Suppose $X \sim Exp(\lambda)$ and that $Y|X \sim N(10, X^2)$. Write an R function to generate realizations from (X, Y), and explore the relationship between X and Y for a chosen value of λ. Can you explain this relationship?

```
bonus.example = function(n, lambda){
  output = matrix(0, 2, n)
  x = rexp(n, lambda)
  y = rnorm(n, mean = 10, sd = x)
  output[1, ] = x
  output[2, ] = y
  return(output)}
```

Illustration: Bonus Example

Example

Suppose $X \sim Exp(\lambda)$ and that $Y|X \sim N(10, X^2)$. Write an R function to generate realizations from (X, Y), and explore the relationship between X and Y for a chosen value of λ. Can you explain this relationship?

```
bonus.example = function(n, lambda){
  output = matrix(0, 2, n)
  x = rexp(n, lambda)
  y = rnorm(n, mean = 10, sd = x)
  output[1, ] = x
  output[2, ] = y
  return(output)}
```

Illustration: Bonus Example

```
test = bonus.example(1000, 0.1)
cor(test[1,], test[2,])
plot(test[1,], test[2,])
```

Example 6.2: The trivariate case

Example

Suppose that $X \sim U(-1,1)$ and $Y \sim Exp(\lambda)$ independently of X and that

$$f_{Z|X,Y}(Z \mid X = x, Y = y) = \frac{1}{\sqrt{2\pi}y} e^{-\frac{1}{2}\left(\frac{z-x}{y}\right)^2}.$$

Write an R function to sample realizations (X, Y, Z) in the case $\lambda = 5$ and produce a scatterplot of (X, Z).
Note that, given that $X = x$, $Y = y$ then Z has a normal distribution:

$$Z \mid X = x, Y = y \sim N(x, y^2).$$

Example 6.2: Solution

```
example6.2 = function(n) {
    output = matrix(0, 3, n)
     x = runif(n, -1, 1)
     y = rexp(n, rate = 5)
     z = rnorm(n, mean = x, sd = y)
     output[1, ] = x
     output[2, ] = y
     output[3, ] = z
     output
}
```

Make some notes about the R function.

Example 6.2: Solution

```
test = example6.2(2000)
plot(test[1, ], test[3, ], xlab = 'x', ylab = 'z')
```

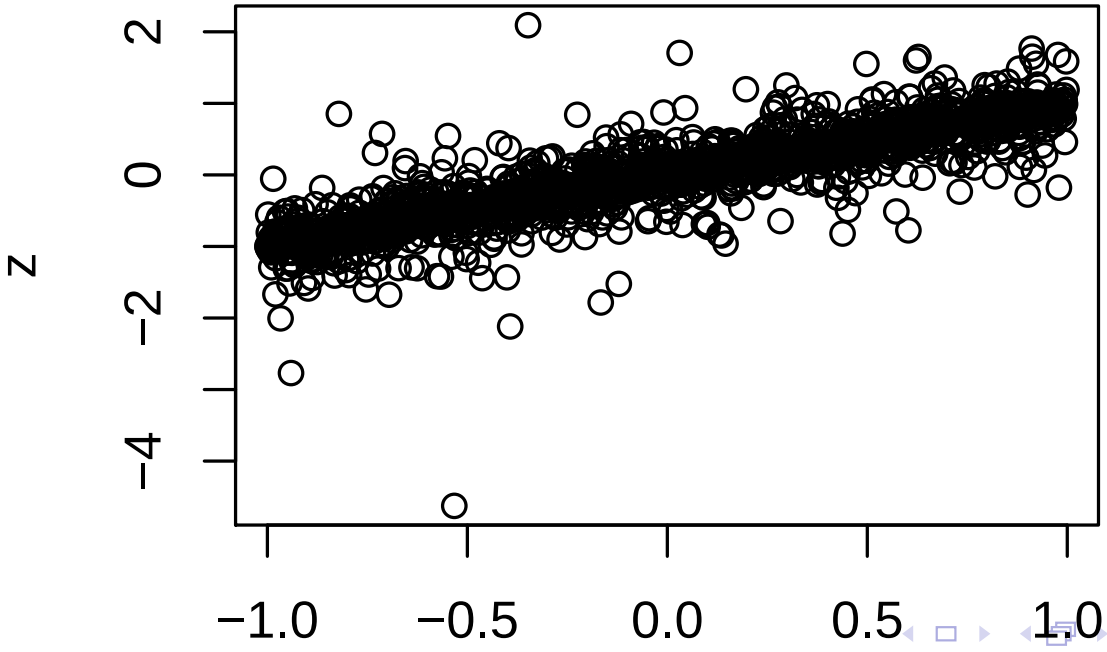

6.2.1 The bivariate Normal distribution

Suppose μ_x, μ_y, $\sigma_x \geq 0$, $\sigma_y \geq 0$ and $-1 \leq \rho \leq 1$ are constants. Define the 2×2 matrix Σ by

$$\Sigma = \begin{pmatrix} \sigma_x^2 & \rho\sigma_x\sigma_y \\ \rho\sigma_x\sigma_y & \sigma_y^2 \end{pmatrix}.$$

Then define a joint probability density function by

$$f_{X,Y}(x,y) = \frac{1}{2\pi\sqrt{\det \Sigma}} \exp\left(-\frac{1}{2}Q(x,y)\right)$$

where

$$Q(x,y) = (\underline{x} - \underline{\mu})^T \Sigma^{-1} (\underline{x} - \underline{\mu})$$

and

$$\underline{x} = \begin{pmatrix} x \\ y \end{pmatrix}, \quad \underline{\mu} = \begin{pmatrix} \mu_x \\ \mu_y \end{pmatrix}.$$

6.2.1 The bivariate Normal distribution

If random variables (X, Y) have joint probability density given by $f_{X,Y}$ above, then we say that (X, Y) have a **bivariate normal distribution** and write

$$(X, Y)^T \sim N_2(\underline{\mu}, \Sigma).$$

It can be proved that the function $f_{X,Y}(x, y)$ integrates to 1 and therefore defines a valid joint pdf.

The notes contain expansions of $Q(x, y)$ and $\det \Sigma$.

Pictures

$\sigma_x = \sigma_y, \ \rho = 0$

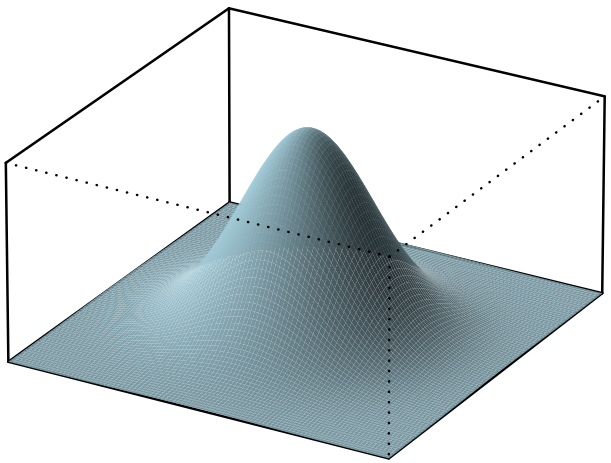

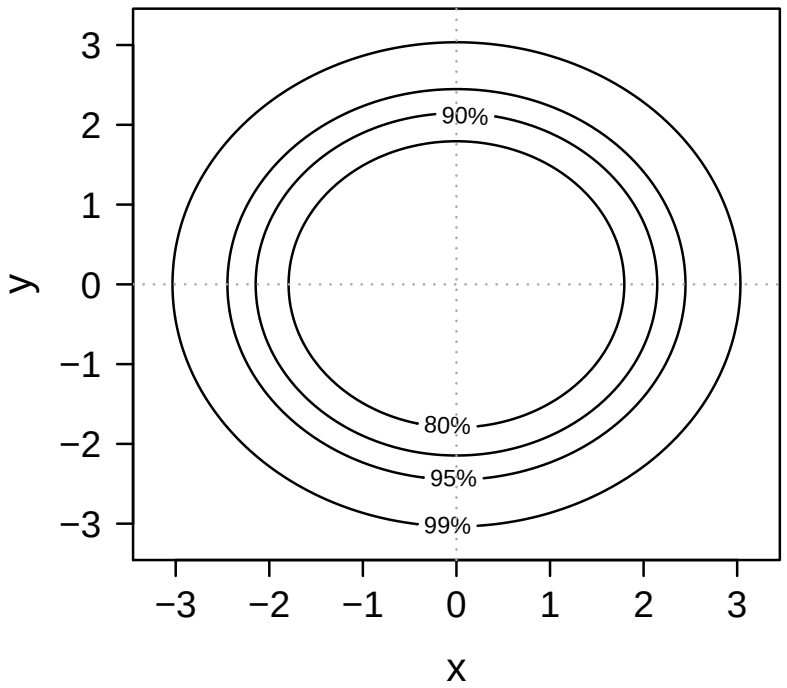

Pictures

$\sigma_x = 2\sigma_y, \ \rho = 0$

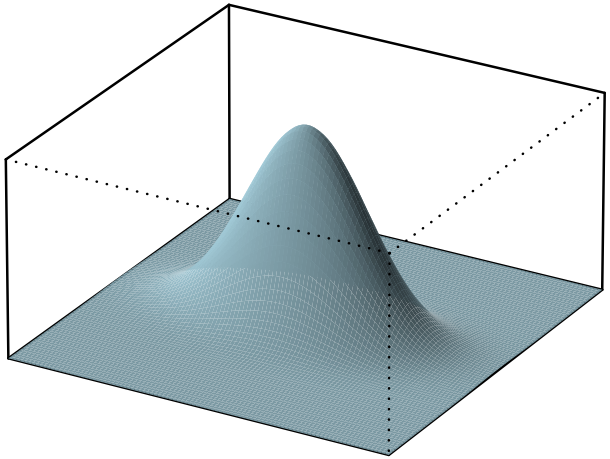

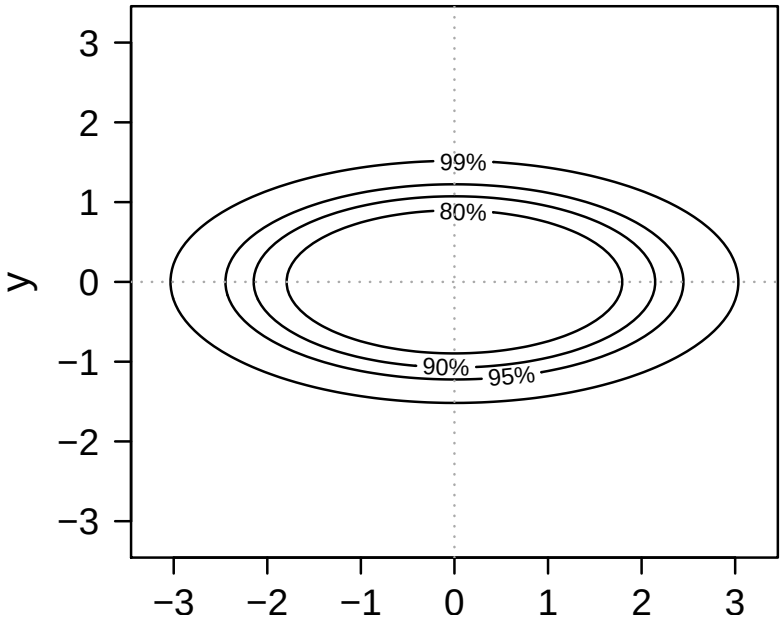

Pictures

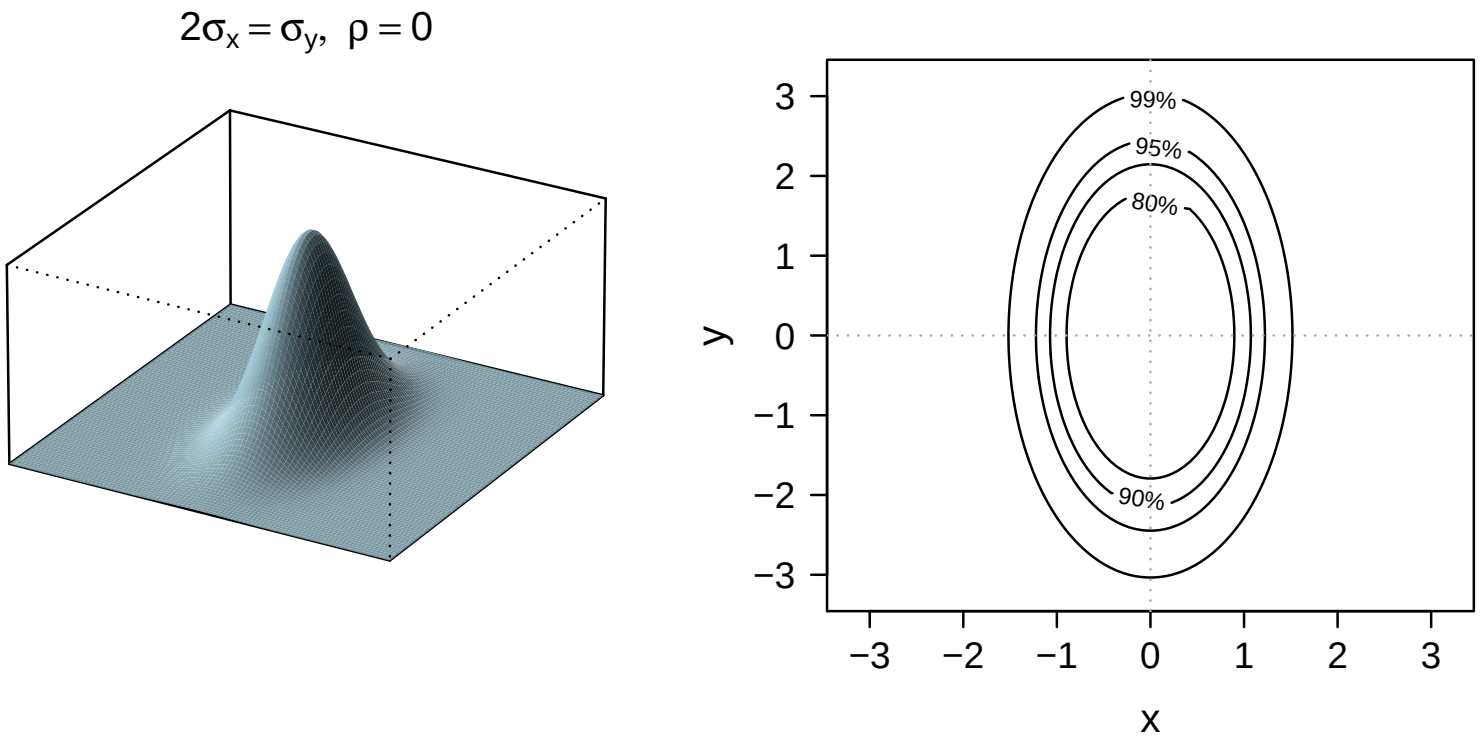

Pictures

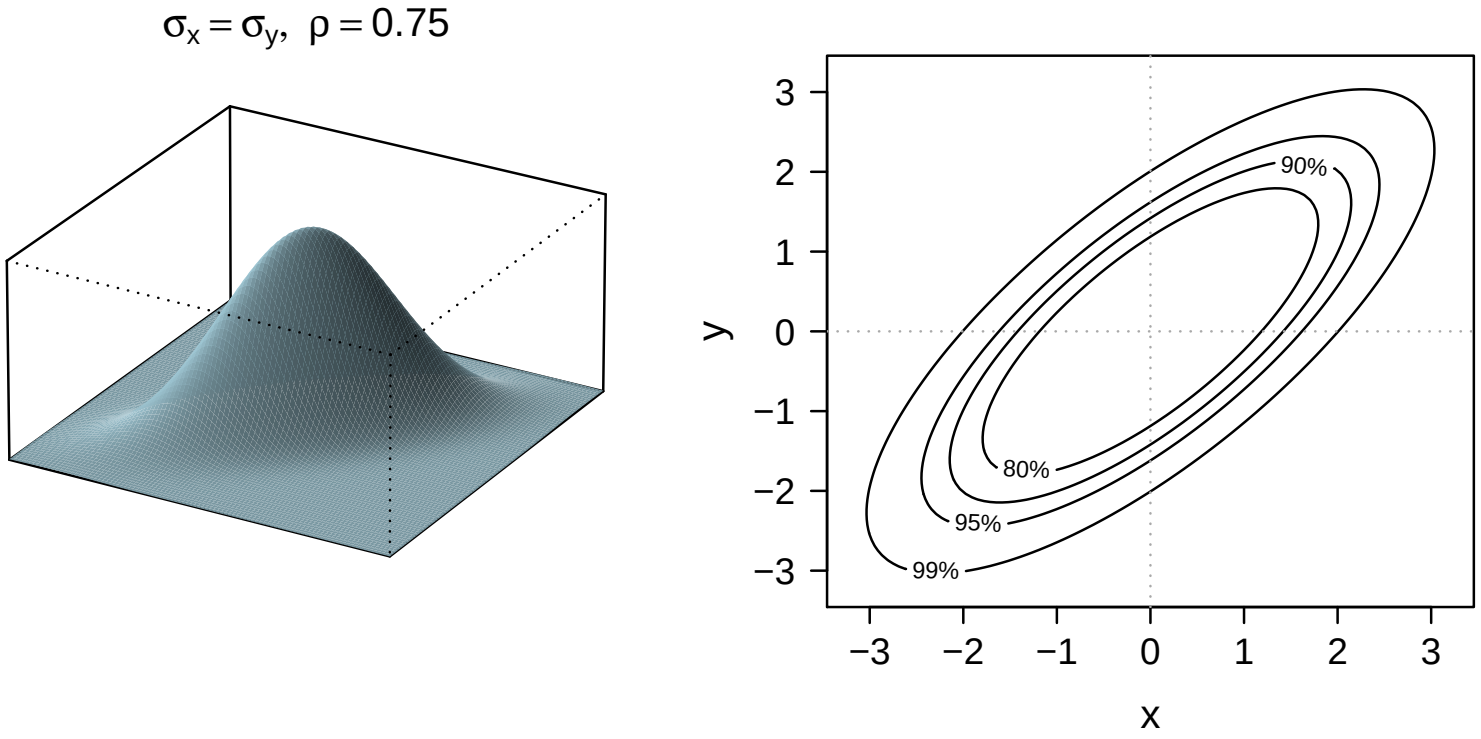

Pictures

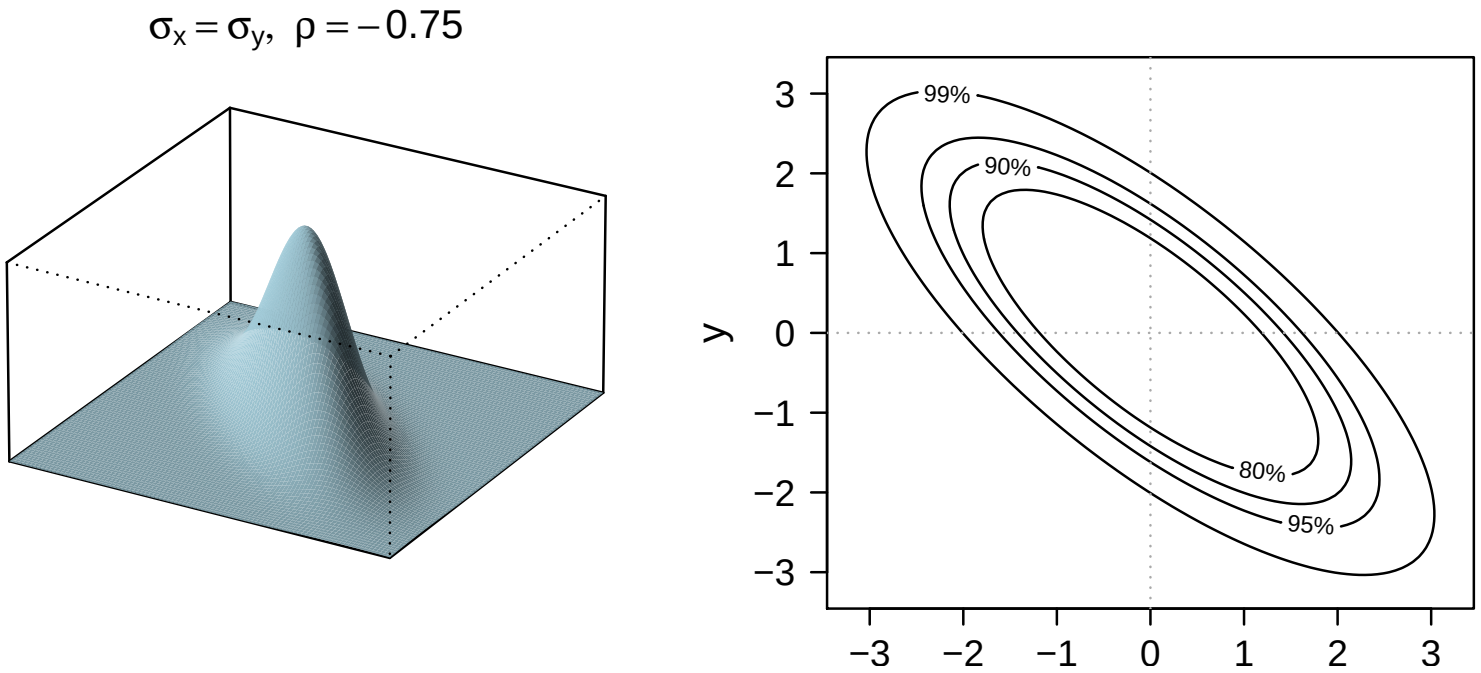

Pictures

$2\sigma_x = \sigma_y, \ \rho = 0.75$

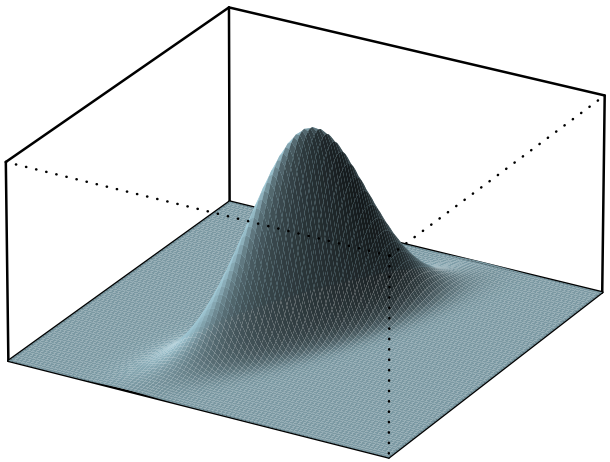

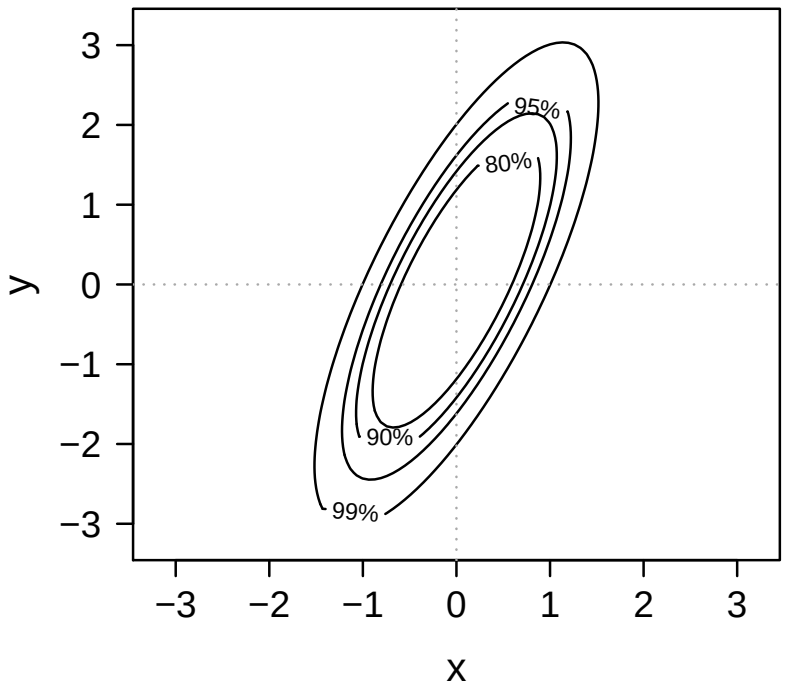

Comments

1. $Q(x, y) \geq 0$ with equality only when $\underline{x} = \underline{\mu}$. It follows that the density function has its mode at $\underline{x} = \underline{\mu}$.
2. Changing the values of μ_x, μ_y does not change the shape of the plots, but corresponds to a translation of the xy-plane i.e. changing μ_x, μ_y just shifts the contours / surface to a new mode position.
3. The contours of equal density are circular when $\sigma_x = \sigma_y$ and $\rho = 0$ and elliptical when $\sigma_x \neq \sigma_y$ or $\rho \neq 0$.
4. σ_x and σ_y control the extent to which the distribution is dispersed.
5. The parameter ρ is the correlation of X, Y i.e. $\mathrm{Cor}\,(X, Y) = \rho$. Thus for non-zero ρ, the contours are at an angle to the axes.

6.2.1 Marginals and conditionals

Suppose $(X, Y)^T \sim N_2(\underline{\mu}, \Sigma)$. Then:-

1. The marginal distributions are normal:

$$X \sim N(\mu_x, \sigma_x^2) \quad \text{and}$$
$$Y \sim N(\mu_y, \sigma_y^2).$$

2. The conditional distributions are normal:

$$X|Y = y \sim N(\mu_x + \rho\frac{\sigma_x}{\sigma_y}(y - \mu_y), \sigma_x^2(1 - \rho^2)) \quad \text{and}$$
$$Y|X = x \sim N(\mu_y + \rho\frac{\sigma_y}{\sigma_x}(x - \mu_x), \sigma_y^2(1 - \rho^2)).$$

3. When $\rho = 0$, X and Y are independent.
4. Linear combinations of X and Y are also normally distributed:

$$aX + bY \sim N(a\mu_x + b\mu_y, a^2\sigma_x^2 + b^2\sigma_y^2 + 2ab\rho\sigma_x\sigma_y)$$

where a, b are constants.

6.2.2 Simulating bivariate normal random variables

R has built-in functions to simulate from the bivariate normal distribution, which we will see soon.

However, we can use the simulation strategy outlined in Section 6.1, as we have results for the **marginals** and **conditionals**.

Example 4.3

Example

Suppose $(X, Y)^T \sim N_2(\underline{\mu}, \Sigma)$ where $\mu_x = 2$, $\mu_y = 3$, $\sigma_x = 1$, $\sigma_y = 1$ and $\rho = 0.5$.

Simulate a sample of size 500 from this distribution and draw a scatter plot.

Use simulation to find $\Pr\left(X^2 + Y^2 < 9\right)$.

Example 4.3: Solution

The marginal distribution of X is $X \sim N(2, 1^2)$.

Using the formula for the conditionals, we have:

$$\begin{aligned} Y|X = x &\sim N(\mu_y + \rho\frac{\sigma_y}{\sigma_x}(x - \mu_x), \sigma_y^2(1 - \rho^2)) \\ &\sim N(3 + 0.5(x - 2), 0.75). \end{aligned}$$

Example 4.3: Solution

```r
npts = 500
x = rnorm(npts, mean=2, sd = 1)
y = rnorm(npts, mean=3+0.5*(x-2), sd=sqrt(0.75))
```

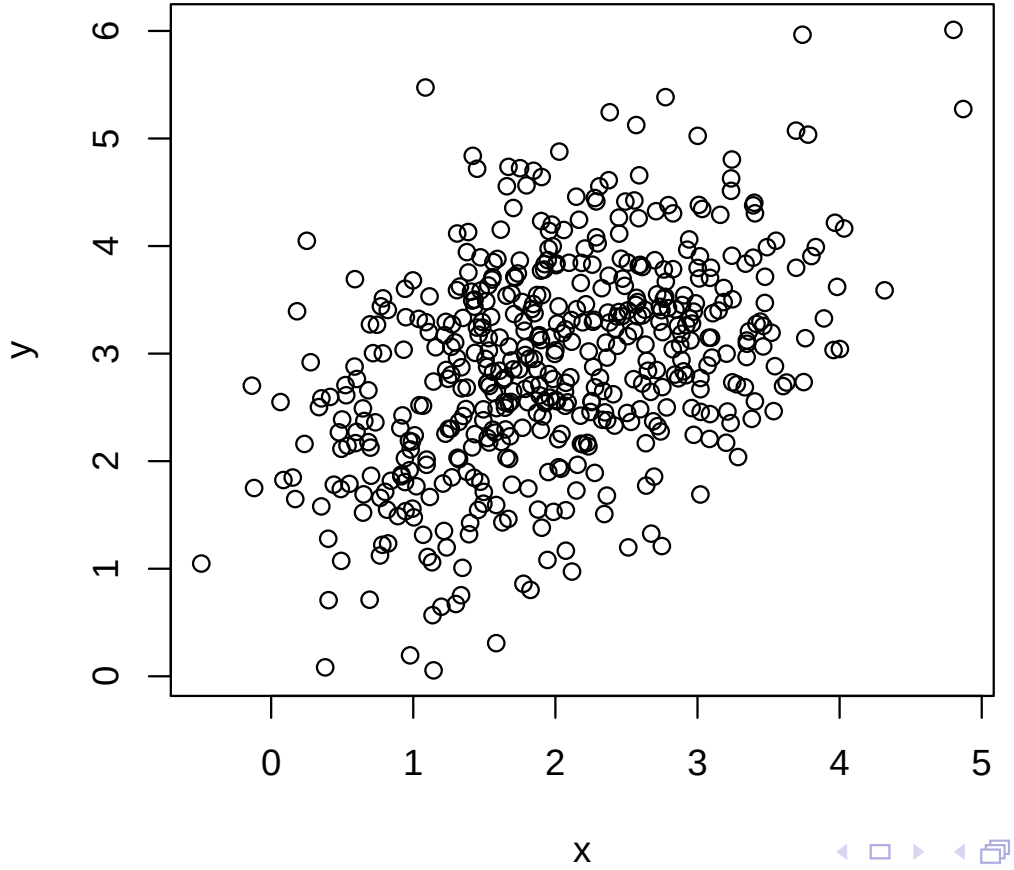

Example 4.3: Solution

To find $\Pr\left(X^2 + Y^2 < 9\right)$ approximately, count the number of points in the region:

```
npts = 10000
x = rnorm(npts, mean=2, sd = 1)
y = rnorm(npts, mean=3+0.5*(x-2),sd=sqrt(0.75))
f = x^2+y^2
sum(f<9)/npts
```

Answer $\simeq 0.2776$.

6.2.3 The multivariate normal distribution

The multivariate normal distribution is defined on vectors in $\mathbb{R}^n$. Suppose that $\underline{X}$ is a random vector with n entries, i.e. $\underline{X} = (X_1, \ldots, X_n)^T$.

Then

$$\underline{X} \sim N_n(\underline{\mu}, \Sigma)$$

if $X_1, \ldots, X_n$ have joint PDF given by

$$f_{\underline{X}}(\underline{x}) = \frac{1}{2\pi\sqrt{\det \Sigma}} \exp\left(-\frac{1}{2} Q(\underline{x})\right)$$

where

$$Q(\underline{x}) = (\underline{x} - \underline{\mu})^T \Sigma^{-1} (\underline{x} - \underline{\mu}).$$

This definition makes sense for any column vector $\underline{\mu} \in \mathbb{R}^n$ and any positive definite $n \times n$ matrix Σ.

Remarks

1. The vector $\underline{\mu}$ is the mean of the distribution and Σ is called the covariance matrix.
2. All the marginal distributions of $\underline{X}$ are normal. (We do not specify their parameters here, however).
3. Similarly, all the conditional distributions of $\underline{X}$ are normal. (Again, we do not specify the parameters of these distributions here).

Example 6.4

Example

Suppose $\underline{X} \sim N_3(0, \Sigma)$ where

$$\Sigma = \begin{bmatrix} 3 & 2 & 1 \\ 2 & 2 & 1 \\ 1 & 1 & 3 \end{bmatrix}.$$

Use R to sample from this distribution. Create a scatterplot of (X, Y) samples and compute the correlation.

Example 6.4: Solution

In R, you can use the `mvrnorm` function to sample:

```
library(MASS)
npts = 500
mu = c(0, 0, 0)
sigma = matrix(data = c(3,2,1,2,2,1,1,1,3), nrow = 3,
    byrow = TRUE)
x = mvrnorm(npts, mu, sigma)
```

Example 6.4: Solution

Now `x` has dimension `npts`$\times 3$, so column 1 is X and column 2 is Y:

```
plot(x[,1], x[,2], xlab = 'x', ylab = 'y')
```

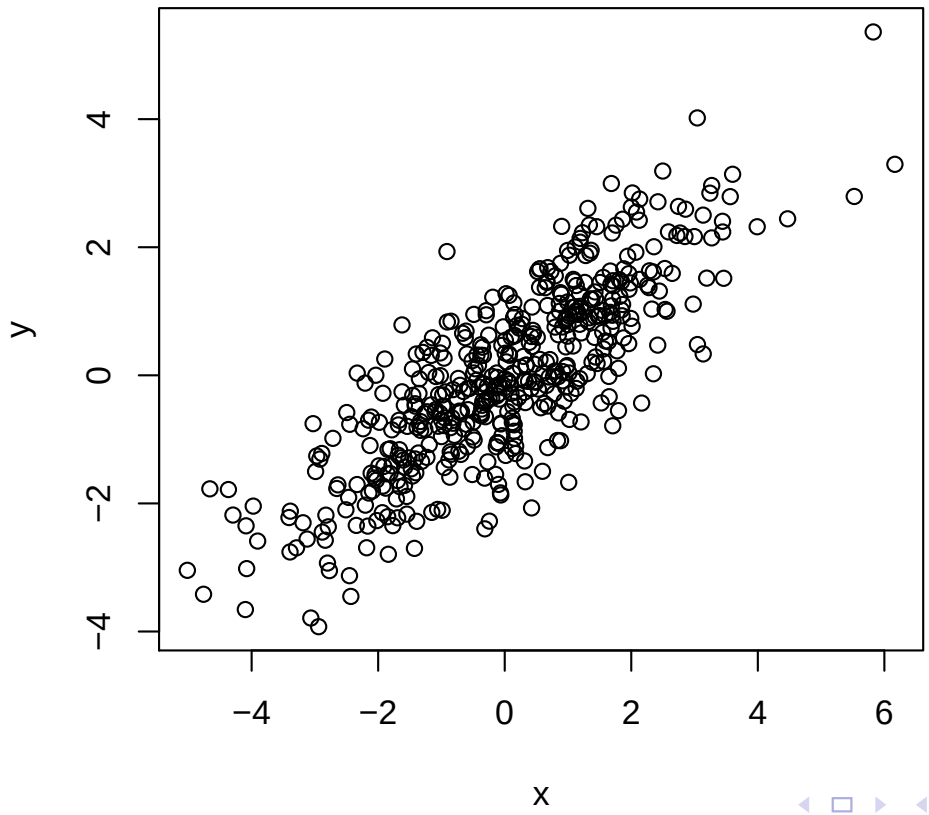

Example 6.4: Solution

The sample correlation is:

```
 cor(x[,1],x[,2])
[1] 0.812629
```

Bonus example

Suppose

$$\begin{pmatrix} X \\ Y \end{pmatrix} \sim N_2 \left[\begin{pmatrix} 4 \\ 1 \end{pmatrix}, \begin{pmatrix} 8 & 2 \\ 2 & 5 \end{pmatrix} \right].$$

The random variable Z is defined by $Z = X + 3Y$. What is the distribution of Z?

Bonus example

We have $Z = X + 3Y$. Using result 4 on page 25, we have

$$E[Z] = 1 \times \mu_x + 3 \times \mu_y = 1 \times 4 + 3 \times 1 = 7.$$

Now from the variance-covariance matrix, we have $\rho\sigma_x\sigma_y = 2$. Thus

$$\begin{aligned} Var(Z) &= 1^2 \times \sigma_x^2 + 3^2 \times \sigma_y^2 + 2 \times 1 \times 3 \times (\rho\sigma_x\sigma_y) \\ &= 1 \times 8 + 9 \times 5 + 2 \times 1 \times 3 \times 2 \\ &= 65. \end{aligned}$$

Therefore $Z \sim N(7, 65)$.

Bonus example

We have $Z = X + 3Y$. Using result 4 on page 25, we have

$$E[Z] = 1 \times \mu_x + 3 \times \mu_y = 1 \times 4 + 3 \times 1 = 7.$$

Now from the variance-covariance matrix, we have $\rho\sigma_x\sigma_y = 2$. Thus

$$\begin{aligned} Var(Z) &= 1^2 \times \sigma_x^2 + 3^2 \times \sigma_y^2 + 2 \times 1 \times 3 \times (\rho\sigma_x\sigma_y) \\ &= 1 \times 8 + 9 \times 5 + 2 \times 1 \times 3 \times 2 \\ &= 65. \end{aligned}$$

Therefore $Z \sim N(7, 65)$.

Bonus example

We have $Z = X + 3Y$. Using result 4 on page 25, we have

$$E[Z] = 1 \times \mu_x + 3 \times \mu_y = 1 \times 4 + 3 \times 1 = 7.$$

Now from the variance-covariance matrix, we have $\rho\sigma_x\sigma_y = 2$. Thus

$$\begin{aligned} Var(Z) &= 1^2 \times \sigma_x^2 + 3^2 \times \sigma_y^2 + 2 \times 1 \times 3 \times (\rho\sigma_x\sigma_y) \\ &= 1 \times 8 + 9 \times 5 + 2 \times 1 \times 3 \times 2 \\ &= 65. \end{aligned}$$

Therefore $Z \sim N(7, 65)$.

Bonus example

We have $Z = X + 3Y$. Using result 4 on page 25, we have

$$E[Z] = 1 \times \mu_x + 3 \times \mu_y = 1 \times 4 + 3 \times 1 = 7.$$

Now from the variance-covariance matrix, we have $\rho\sigma_x\sigma_y = 2$. Thus

$$\begin{aligned} Var(Z) &= 1^2 \times \sigma_x^2 + 3^2 \times \sigma_y^2 + 2 \times 1 \times 3 \times (\rho\sigma_x\sigma_y) \\ &= 1 \times 8 + 9 \times 5 + 2 \times 1 \times 3 \times 2 \\ &= 65. \end{aligned}$$

Therefore $Z \sim N(7, 65)$.

Bonus example

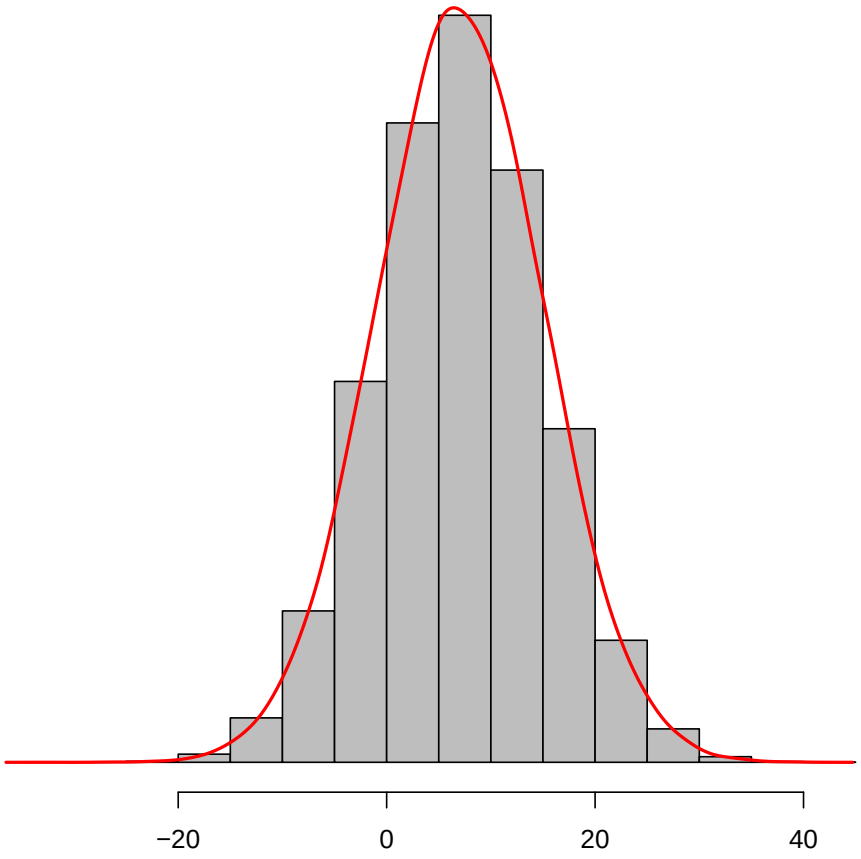

Synchronous Online: End 1pm, Wednesday 9th December

- That's us done for today, thanks for coming along!
- Non-Synchronous activities to be completed this week, in the following order:
  1. Go through all examples in Chapter 6 of the notrs, making sure you're 100% happy with them!
  2. If you're not happy with anything in (1), email Lee and arrange a Zoom call!
  3. Keep working on your project
- No pre-lecture work to do next week, as we have a compoter practical session: Tuesday 15th December, 9am/11am/1pm/3pm

Synchronous Online: End 1pm, Wednesday 9th December

- That's us done for today, thanks for coming along!
- Non-Synchronous activities to be completed this week, in the following order:
  1. Go through all examples in Chapter 6 of the notrs, making sure you're 100% happy with them!
  2. If you're not happy with anything in (1), email Lee and arrange a Zoom call!
  3. Keep working on your project
- No pre-lecture work to do next week, as we have a compoter practical session: Tuesday 15th December, 9am/11am/1pm/3pm

Synchronous Online: End 1pm, Wednesday 9th December

- That's us done for today, thanks for coming along!
- Non-Synchronous activities to be completed this week, in the following order:
  1. Go through all examples in Chapter 6 of the notrs, making sure you're 100% happy with them!
  2. If you're not happy with anything in (1), email Lee and arrange a Zoom call!
  3. Keep working on your project
- No pre-lecture work to do next week, as we have a compoter practical session: Tuesday 15th December, 9am/11am/1pm/3pm